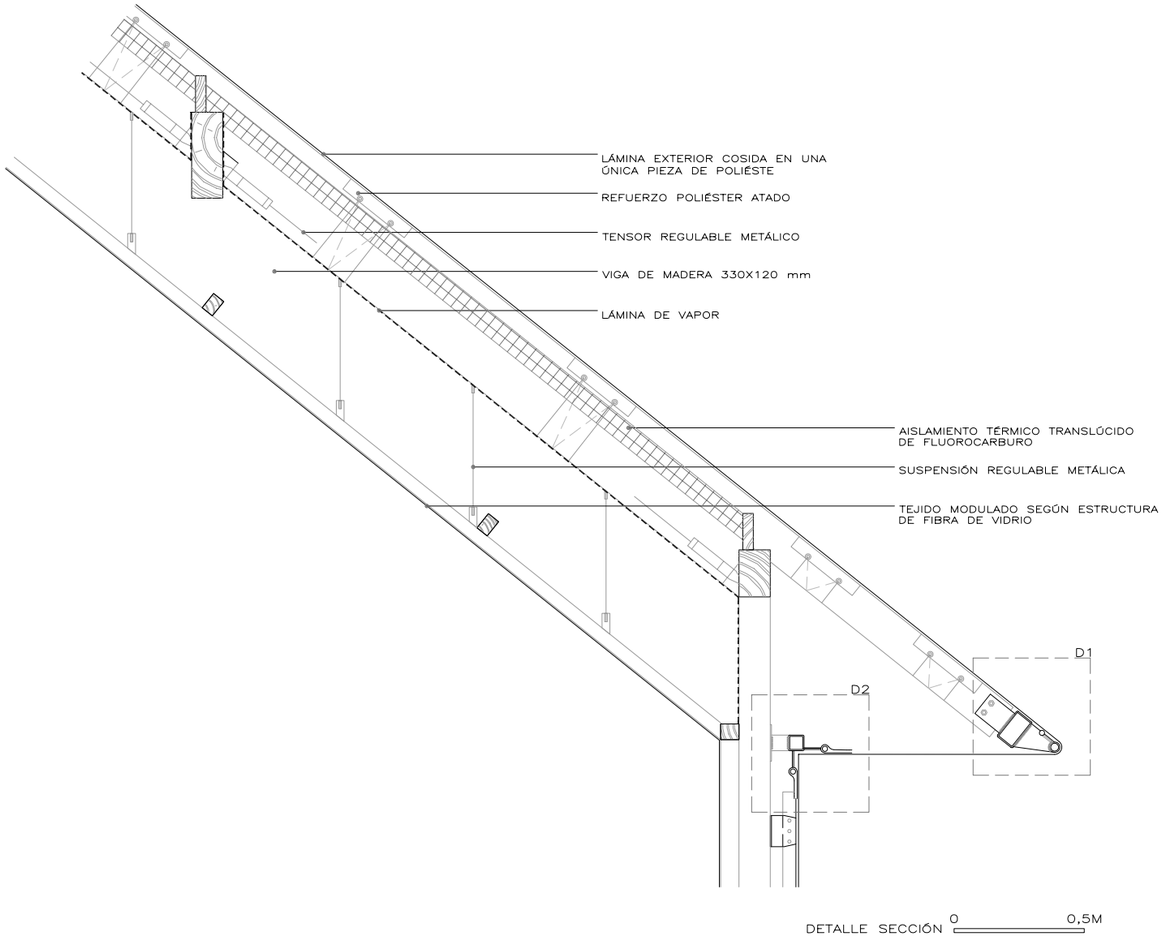

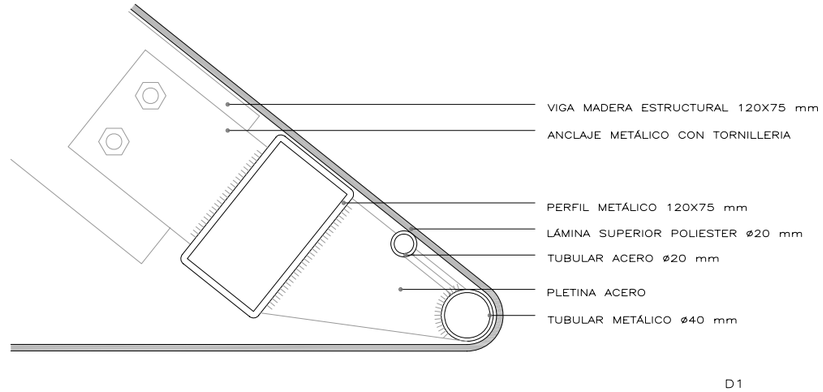

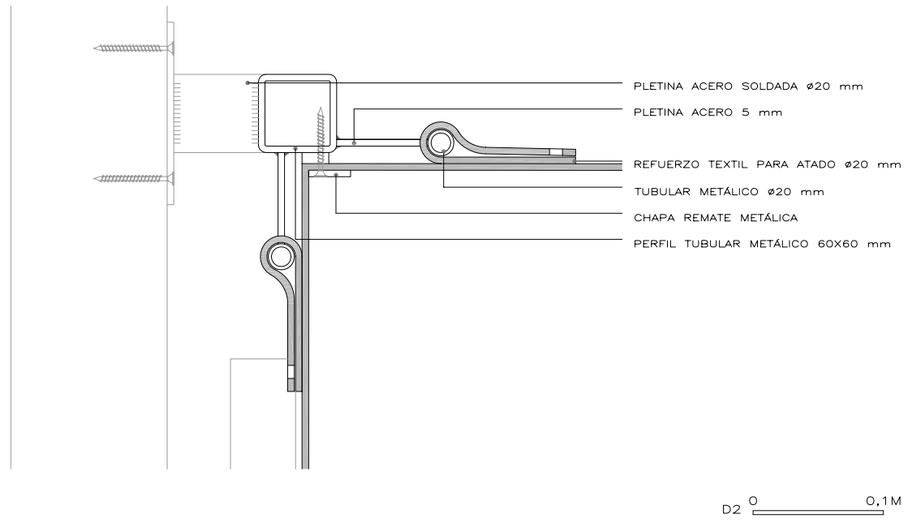

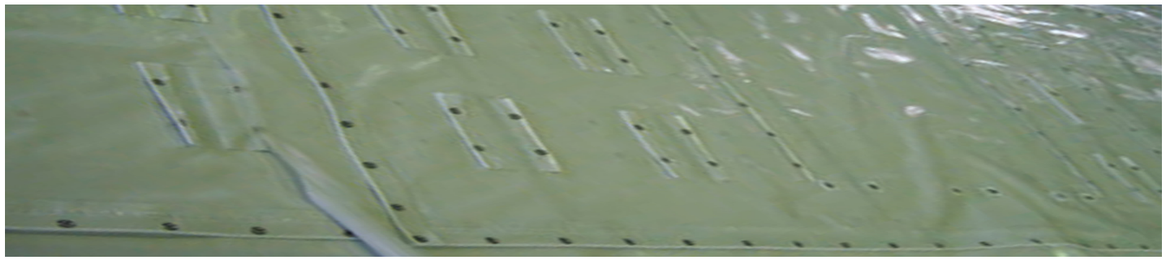

Cubierta inclinada atada de poliester Kengo Kuma. Meme House © Kengo Kuma & Associates